Lumencia™
Multi-Unit Residential Lighting

Job Name:
Type:
Part #:
Notes:

LLBRK-LED4 GIMBAL

4" Gimbal Recessed Downlight

STANDARD

DAMP | Intertek | CLASS B | ENERGY STAR

Economy 4" Gimbal Recessed downlight retrofit solution with integrated LED power supply and thermal management system combined in a single compact unit designed to fit most standard 4" recessed cans.

PERFORMANCE:

- Voltage: 120V
- Power Consumption: 10w
- CRI: 80
- Color Temperature: See Ordering Information for available color Temperatures
- Lumens: See Ordering Information for Lumens
- Dimming: 10% with most dimmers
- Operating temperature: -20 C- 40C (-4F – 104F)

WARRANTY:

- Tested in accordance with IESNA LM79 & LM80
- ETL Listed for Damp Locations
- Passes FCC Class B
- Five Year warranty
- Energy Star Qualified

NOTES:

- Compatible with most 4" housings.
- Durable thermoplastic construction, no tools required for installation.
- Quick connect wiring; includes E26 Socket Adapter.
- Suitable for use in ICAT, AT, and Non-IC recessed housings.

DIMENSIONS

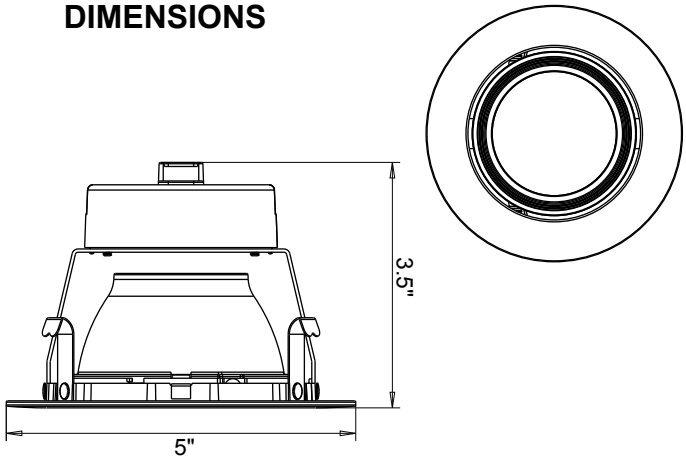

ORDERING INFORMATION:

MODEL	VOLTAGE/WATTAGE/CRI/COLOR TEMP/ LUMENS/CERTIFICATION
LLBRK-LED4-GR-27K-ECO	120V/10W/80CRI/27K/675LM/ESTAR
LLBRK-LED4-GR-3K-ECO	120V/10W/80CRI/30K/675LM/ESTAR
LLBRK-LED4-GR-4K-ECO	120V/10W/80CRI/40K/750LM/ESTAR

2020.03

Phone: 215-512-7000 **Fax:** 267-288-5604
www.Lumencia.com

Specifications subject to change without prior notice.
© 2020 Lumencia. ALL RIGHTS RESERVED