Lumencia™
Multi-Unit Residential Lighting

Job Name:
Type:
Part #:
Notes:

LLBRK-LED36 DL Series

6" Recessed Downlight

STANDARD

WET | Intertek | CLASS B | ENERGY STAR

6" Dome light for surface and retrofit to recessed housings from 3-6"

DISCONTINUED

PERFORMANCE:
Voltage/Power Consumption/CRI/Lumens

LLBRK-LED36: 120V/14W/80CRI/1200LM

- Dimming: 10% with most dimmers
- Operating temperature: -20 C- 40C (-4F – 104F)

NOTES:

- installs to most 3", 4", 5", and 6" cans. Mounts to 4" J-Box with included bracket
- Durable thermoplastic construction. Quick connect wiring; includes E26 Socket Adapter.
- Suitable for use in ICAT, AT, and Non-IC housings and ceilings.

DIMENSIONS:

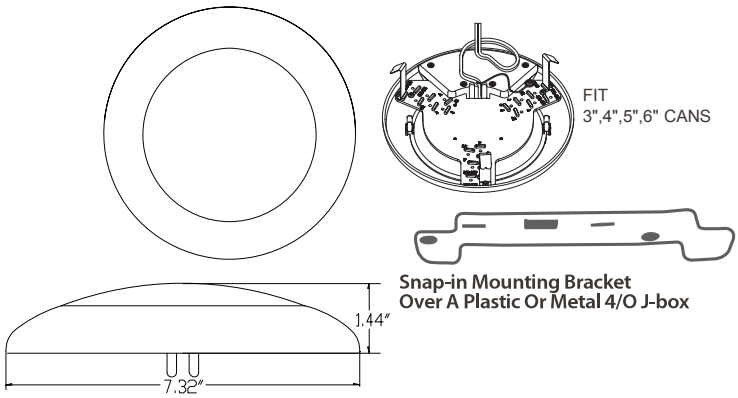

WARRANTY/LISTING:

- Tested in accordance with IESNA LM79 & LM80
- ETL Listed for Wet Locations
- Passes FCC Class B
- Five Year warranty
- Energy Star Qualified

ORDERING INFORMATION

Model
LLBRK-LED36-DL-ECO-27K
LLBRK-LED36-DL-ECO-30K
LLBRK-LED36-DL-ECO-35K
LLBRK-LED36-DL-ECO-40K
LLBRK-LED36-DL-ECO-50K

LLBRK-LED34-D 4" Series
Discontinued 07/14.2021

2021.07

Specifications subject to change without prior notice.
©2021 Lumencia. ALL RIGHTS RESERVED